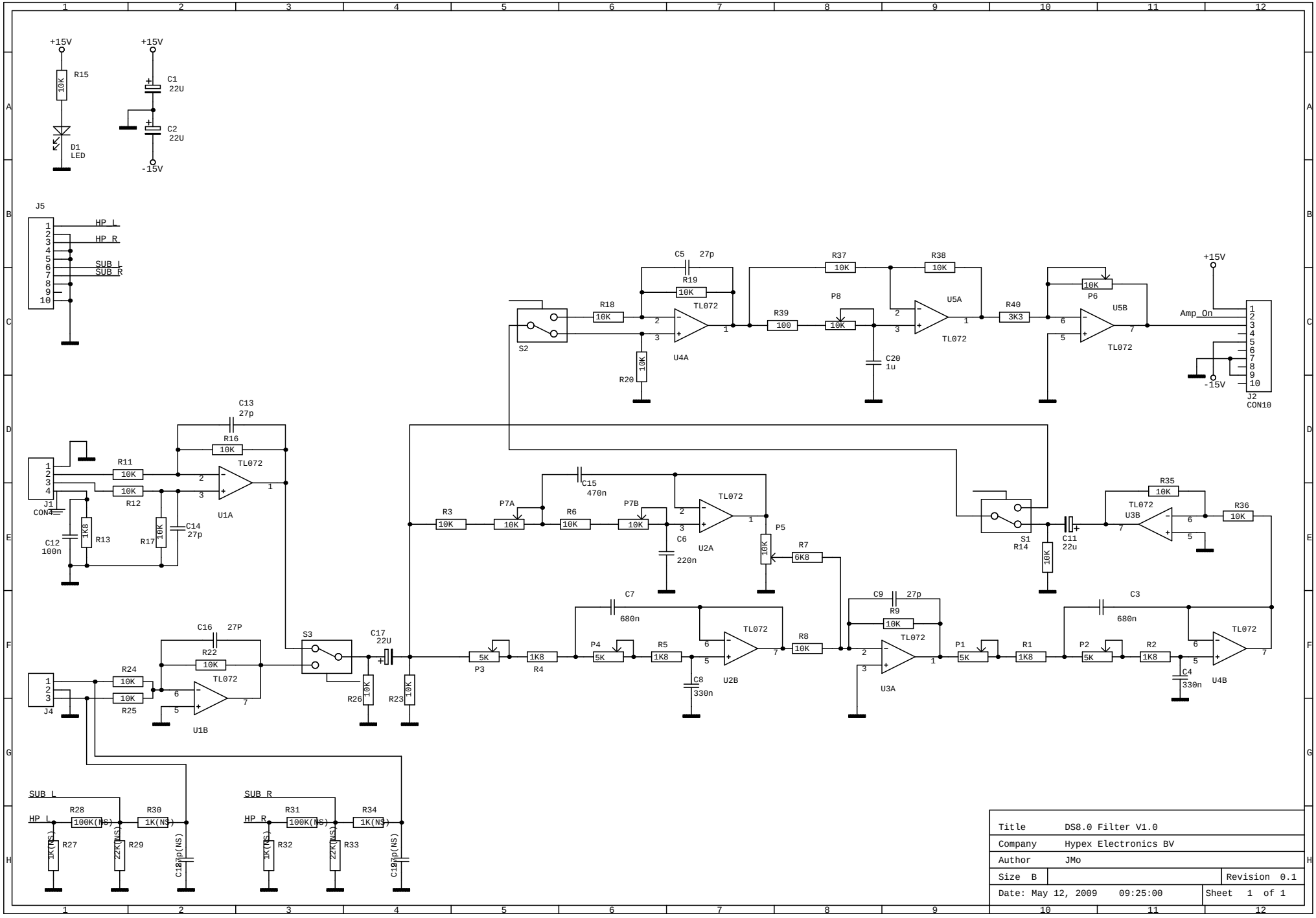

Title	DS8.0 Filter V1.0
Company	Hypex Electronics BV
Author	JMo
Size B	Revision 0.1
Date: May 12, 2009 09:25:00	Sheet 1 of 1